LM 1600 GX170

Power Pack Type LM1600 GX170

- **Working pressure up to 1,000 bar**
- **3.1 calibrated gauges and transducers**
- **Operating medium water**
- **Extensive range of accessories, also prepared for pressure recording**
- **Stable flight case for safe transport**

The MAXIMATOR Power Pack Type LM1600 GX170 is designed for mobile pressure generation of up to 1,000 bar.

Two pressure outlets with shut-off valves allow efficient testing.

Technical Data	
Type:	LM1600-GX170-01-V-6M ATEX
Order Code:	3320.1111
Pressure Ratio:	1 : 170
Working Pressure max.:	approx. 1,000 bar
Operating Media:	Water *
Flow Capacity max.:	depending on application
Connection Air Drive Inlet PL:	1/2“ BSPP
Connection Pressure Outlet P1-P2:	6M (9/16-18 UNF)
Air Drive Pressure:	min. 1 bar / max. 8 bar
Dimensions W x D x H:	900 x 400 x 500 mm
Dimensions Case W x D x H:	1030 x 620 x 720 mm
Weight:	56,5 kg
Weight incl. Case:	114 kg

*other operating media on request

P & ID

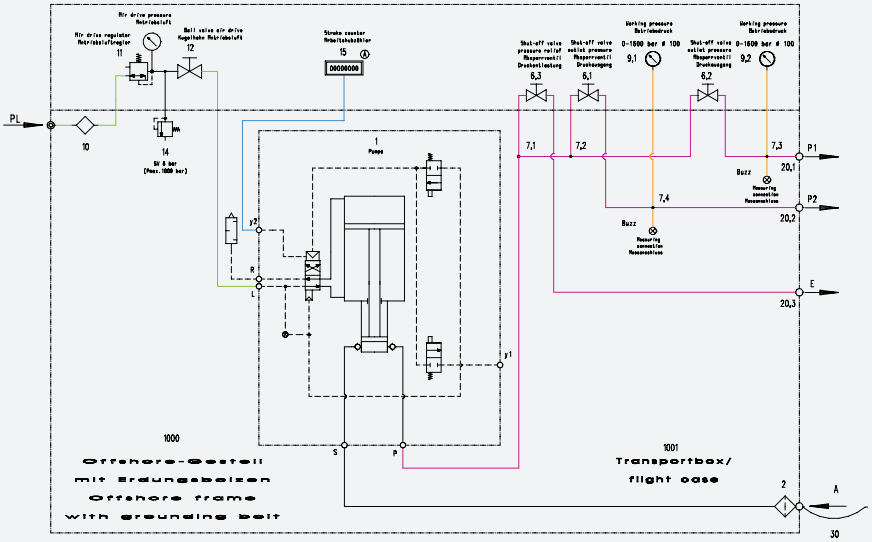

Pos.	Description
1	GX 170-V-6M
2	Suction Filter 1“f BSPP SS
6	2-Way angle valve 22500psi 3/8“
7	Cross 6M / T-Piece 6M
9	Pressure Gauge 0-1600 bar ø100mm
10	Filter 1/2“ BSPP
11	Regulator 1/2“f BSPP (ATEX)
12	Shut off Valve 1/2“ BSPP
14	Safety valve 1/2“
20	Bulkhead Coupling 22500psi 3/8“
30	Hose 1500 mm
1000	Offshore frame
1001	Flight Case

LM 1600 GX170

Scope of Supply

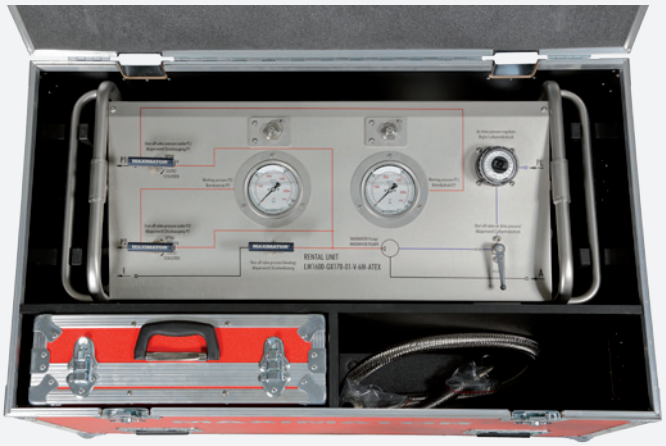

Power Pack LM 1600 GX170

Accessories

Stainless Steel Tray

Flightcase

Hose

Accessories

Pressure Transducer 0-1500 bar, 0-10V *

High Pressure Plug Type 21P6M

Cable Connection 3000 mm

Adapter :
- 6M(a)->1/2“(f) BSPP;
- 6M(a)->FNPT1/2“;
- 6M(a)->1/4“(f) BSPP;
- 6M(a)->FNPT1/4“

Connections

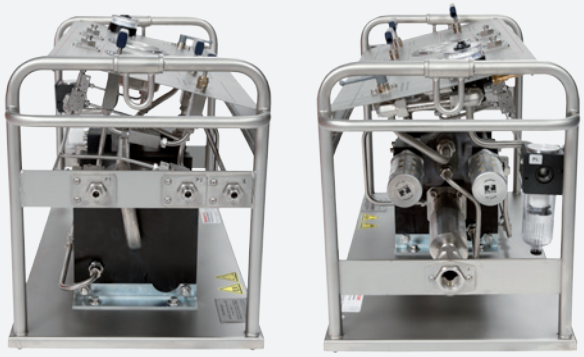

Air Drive Inlet: 1/2“BSPP

Pressure Outlet P1/P2:
6M (9/16-18 UNF)

Measurement Connection:
4M (7/16-20 UNF)

Fluid Inlet: 1“(m) BSPP

Pressure Release:
6M (9/16-18 UNF)

*not to be used in explosion areas
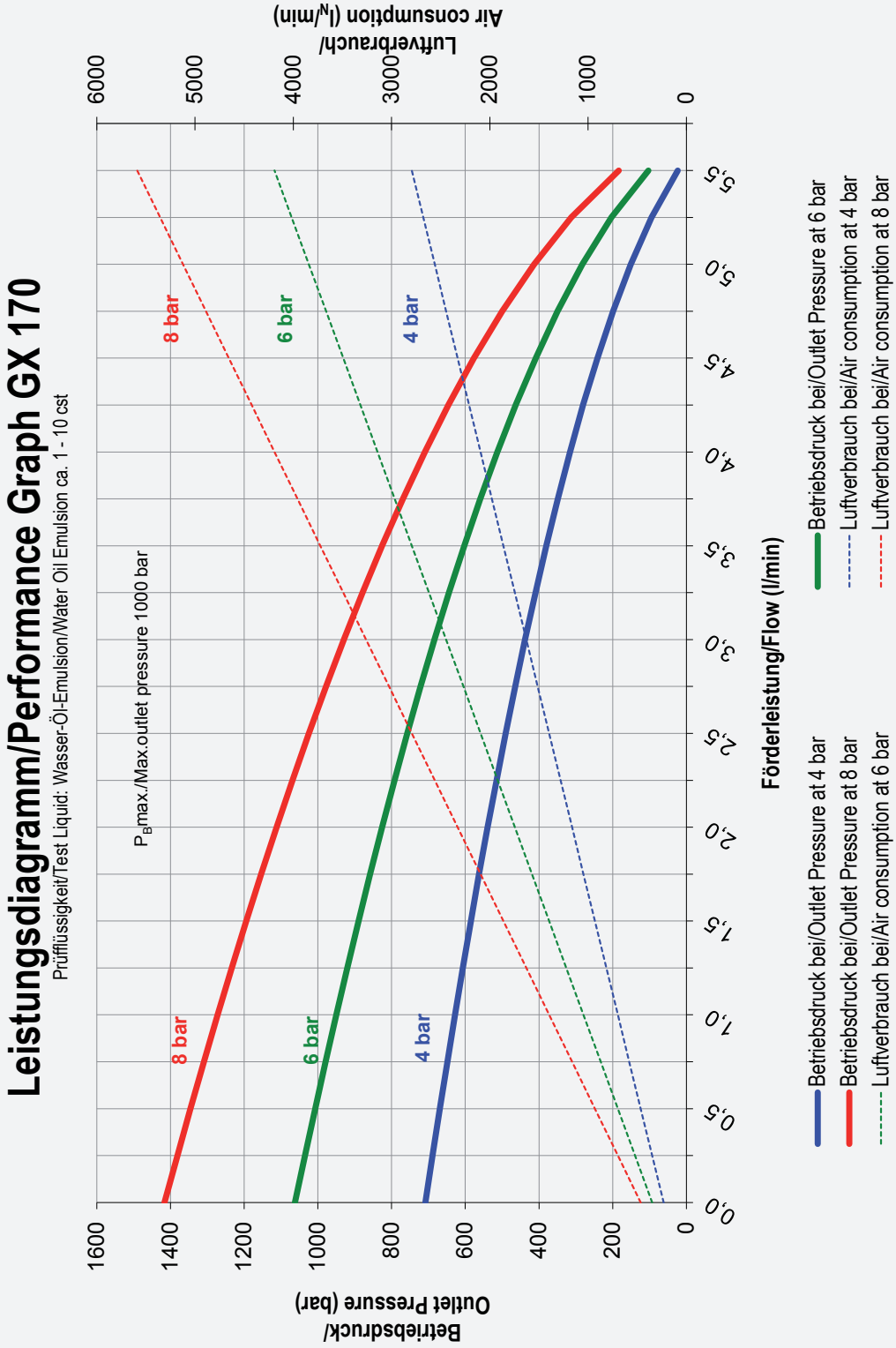
Performance Graph High Pressure Pump Type GX170